Internship Report on

Avionics for High Powered Rocket

At STAR – Space Technology and Aeronautical Rocketry

Darsh Yogesh Butala

Enrollment Number- A70405520001

Department of Aerospace Engineering (AE)

Amity School of Engineering and Technology (ASET)

Amity University Maharashtra

Date – 28th June 2022 to 28th July 2022

Period of Internship – 1 Month

Approval Sheet

This Summer Internship Report entitled "**Avionics for High Powered Rocket**" by **Mr. Darsh Butala** from Department of **Aerospace Engineering (AE), Amity School of Engineering and Technology (ASET), Amity University Maharashtra (AUM),** has been approved.

Examiner
Dr. Amol G. Kamble

Date: 20/10/2022

Declaration

I declare that this written submission represents my ideas in my own words. I also declare that I have adhered to all principles of academic honesty and integrity and have not misrepresented or fabricated or falsified any idea/data/fact/source in my submission. I understand that any violation of the above will be cause for disciplinary action by the Institute and can also evoke penal action from the sources which have thus not been properly cited or from whom proper permission has not been taken when needed.

Darsh Butala
Name of Student

Date: 20/10/2022

Acknowledgement

Firstly, I thank my coordinators and other faculty in Amity University, Mumbai who gave me such a wonderful chance to work in a well-known research lab. The internship opportunity I had in STAR Lab Surat was a great chance for learning and professional development. Therefore, I consider myself as a very lucky individual as I was provided with an opportunity to work on Avionics for High Powered Rocket. I am also grateful for having a chance to meet so many wonderful people and professionals who led me through this internship period. I am using this opportunity to express my deepest gratitude and special thanks to the founder of the lab who despite being extraordinarily busy with his duties, took time out to hear, guide and keep me on the correct path and allow me to carry out my internship at their esteemed lab. I express my deepest thanks to my supervisor for taking part in useful decisions & giving necessary advice and guidance and arranged all facilities to make life easier. I choose this moment to acknowledge his contribution gratefully. It is my radiant sentiment to place on record my best regards, deepest sense of gratitude to my internship coordinator from university.

SPACE TECHNOLOGY AND AERONAUTICAL ROCKETRY

CERTIFICATE OF COMPLETION

This certificate is presented to

Mr. Darsh Butala

in recognition for the completion of

Virtual Training & Internship Program on

Design & Simulation of High Powered Rocket

as an Avionics Intern

conducted from 28 June 2022 to 28 July 2022 at

SPACE TECHNOLOGY AND AERONAUTICAL ROCKETRY

Harsh Patel
Head of Shapers
Department, STAR

Sunny Kabrawala
Director, STAR

Avionics for High Powered Rocket

What is Avionics for High Powered Rockets?

Avionics of any Rocket can be considered as the Brain of the Rockets. It helps in calculating the altitude, helps in activating the recovery system, helps in Guidance of Rocket and also sends the location of the Rocket which helps the user to recover the rocket.

Basic working principle of Avionics for High Powered Rocket:

The basic working principle of Avionics for High Powered Rocket is –

To calculate the altitude the BMP sensor first takes pressure and temperature readings and from this data it calculates the altitude.

The altitude is necessary because when the Rocket is coming back to the earth surface the avionics can detect this using the altitude and can activate the recovery system. So that the rocket will fall back safely.

Once the rocket has touched down it will send the GPS signal to the user which will help the user to navigate and recover the rocket.

Why make Avionics for High Powered Rockets?

Avionics is necessary for High Powered Rockets because without these it will get extremely difficult to recover the rocket and also to properly guide the rocket along its desired path.

Architecture:

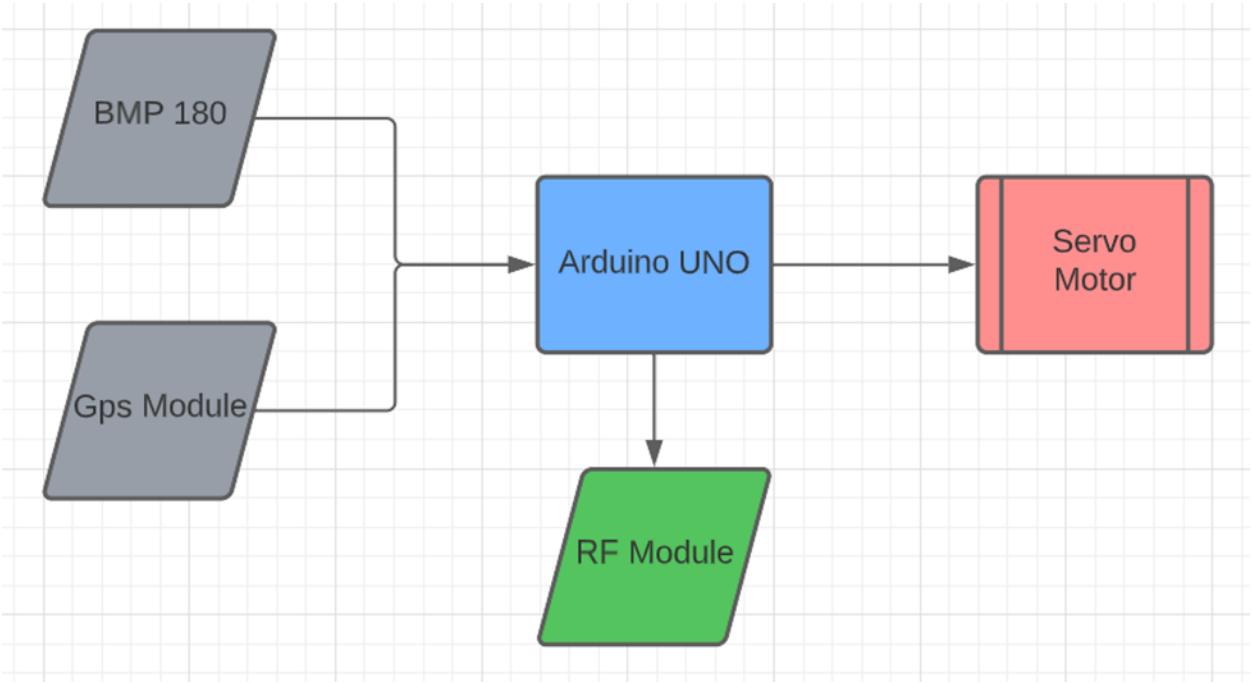

This is a basic flow chart for the Avionics of a High Powered Rocket

BMP 180 Calculates the altitude of the rocket and sends the data to the Arduino board.

GPS Module send the exact location of the Rocket to the Arduino board.

Servo motor is controlled by the Arduino which helps to activate the recovery system.

RF Module is used for wireless communication between the user and the rocket motor.

This is the schematic diagram

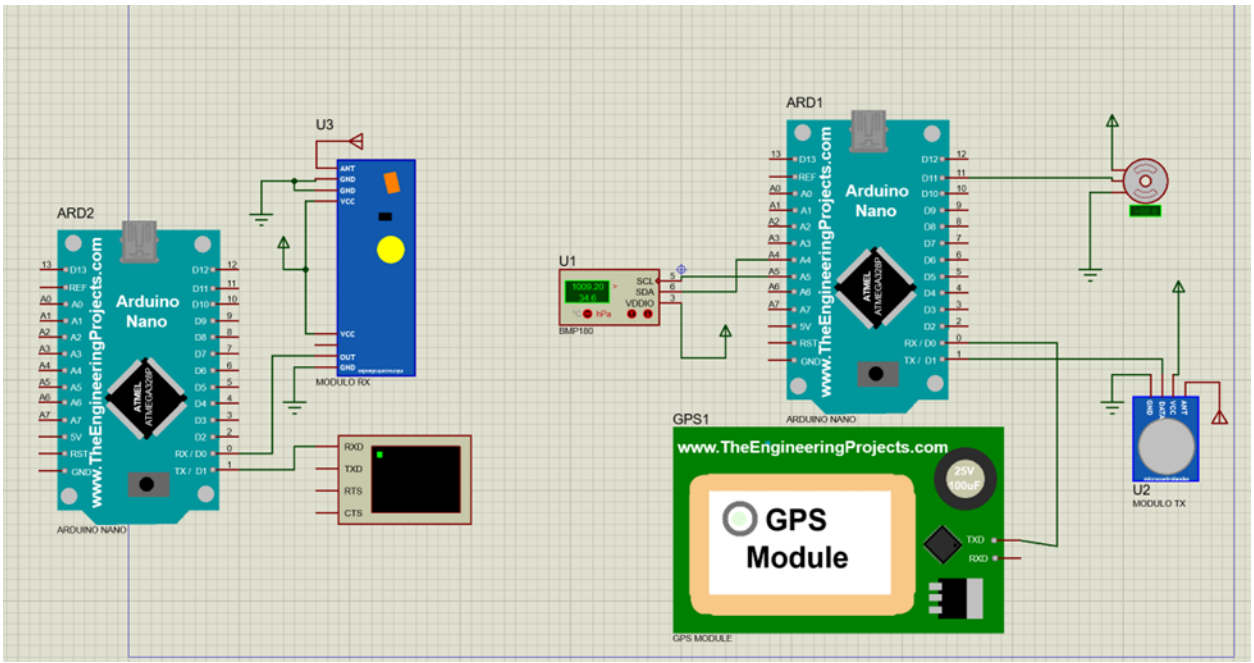

Basic components, software required to build a Title/System:

BMP 180

GPS Module

Arduino UNO

RF Modules

Servo Motor

Price of Each Component

Name	Price
Arduino Nano (X2)	₹800
BMP 280	₹300
GPS Module	₹300
Servo Motor	₹100
Rf Module	₹120
Total	**₹1,620**
Approx.	**₹2,000**

Software Used

Proteus for Simulation

Arduino IDE for Programming

Eagle for PCB Design

Note:

The Battery cost is not included, it depends on the user how big the battery the user wants to place.

Observation:

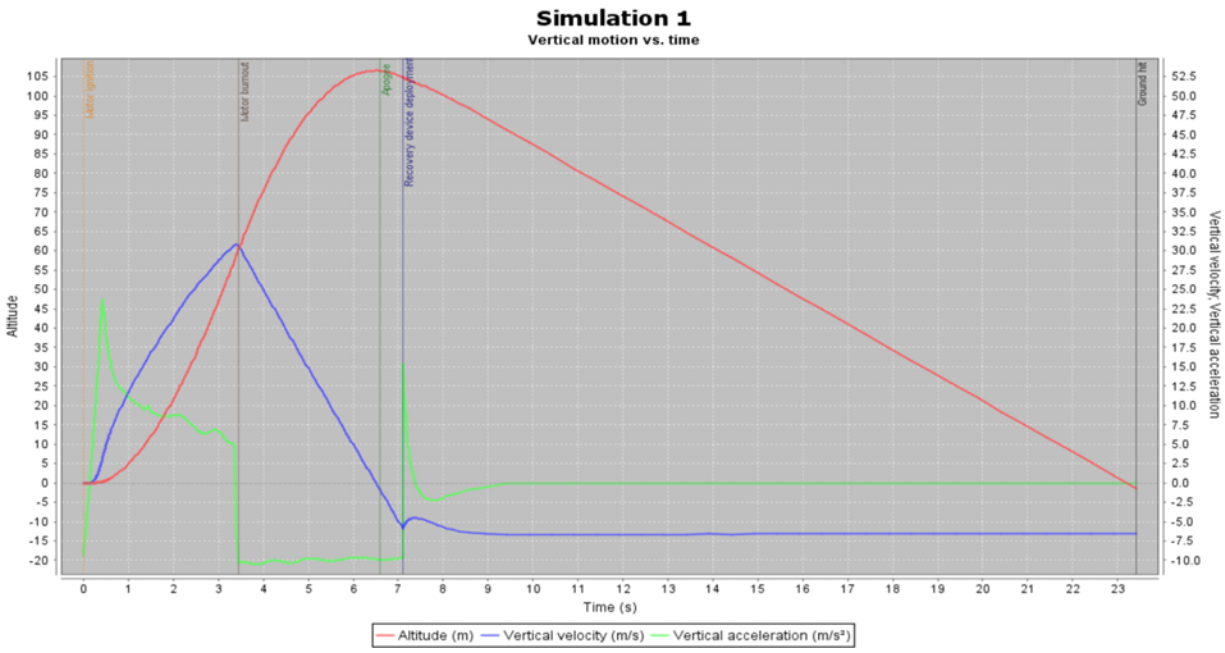

Apogee: 110 meters

Time to Apogee: 6.56 seconds

Maximum Velocity: 35.4m/s

Total Flight Time: 23.8 seconds

Ground Hit Velocity: 5.56 m/s

Results:

Avionics

Altimeter was giving accurate reading with negligible errors

While descending the Arduino was able to activate the recovery system and deploy the parachute.

When touchdown the GPS module started sending the location of the Rocket to the user.

Conclusion:

The avionics for High Power Rockets was successfully designed and tested and all the components were giving accurate readings with negligible errors.

Form this we can conclude that this Avionics system can be used for High powered Rockets

Precautions:

While igniting the Rocket make sure no one is near the Rocket and everyone is maintaining a safe distance.

Before igniting the rocket motor make sure all the connections are secured and all the sensors are working correctly.

The ignition wires should be attached in the very end when all the security and safety checks are completed.

The Rocket should be fired in an open space away from any public property.